SWELLSEAL® 3V

Expansive hydrophilic waterproofing strip for sealing joints in tunnel segments, underground precast elements, horizontal and vertical construction joints and concrete to steel joints

Product Description

SWELLSEAL®3V is a hydrophilic waterproofing strip made from a combination of an elastomer and a hydrophilic resin. When confined, it will swell in contact with water and build up a waterproofing pressure inside the joint to seal the joint against water leaks. Swellseal 3V has a swelling capacity of up to 3V (200% of the original volume) in contact with water. The composition of the compound creates a delayed initial swelling and makes Swellseal 3V safe to install in insitu concrete applications.

Product Advantages

- Swellseal 3V can be used in contact with fresh and sea/brackish water.
- Swellseal 3V swells minimum 3V in contact with fresh water and minimum 2V in contact with sea/brackish water.
- Swellseal 3V has a proven track record in concrete structures subject to medium to high water pressure.
- The composition of the compound creates a delayed initial swelling and makes Swellseal 3V safe to install in insitu concrete applications.
- The composition of the compound creates a delayed initial swelling and makes Swellseal 3V safe to install in insitu concrete applications.
- Swelling capacity up to 3 times the original volume in contact with water.
- Will not sag when correctly placed.
- Easy to install by nailing or gluing with Swellseal Adhesives or MS Fixer.
- Due to its flexibility and high swelling capacity, Swellseal 3V can absorb small movements in the construction.
- Has a good all-round chemical resistance(*) and can resist petroleum, mineral and vegetable oils and greases
- Swellseal 3V has a good impact resistance.

(*) For chemical resistance please contact your local GCP representative.

Field of Applications

- Sealing joints between tunnel segments.
- Swellseal 3V can be used for sealing joints between concrete precast elements, horizontal and vertical construction joints, sealing pipe penetrations, sealing concrete to steel joints, etc.
- For sealing construction joints in fresh concrete where concrete cover is at least 10cm to all sides.

Properties

	VALUE	NORM
Swelling Ratio Fresh Water	Min. 3V	ASTM D471-12
Swelling Ratio in 3% Salt Water	Min. 2V	ASTM D471-12
Tensile Strength	Approx. 1.5 N/mm^2	ASTM D412
Elongation at Break	Approx. 220%	ASTM D412
Hardness Shore A	Approx. 50	ASTM D2240
Density	Approx. 1.2kg / dm^3	ASTM D471-75
Service Temperature	-50ºC to 75ºC	

Appearance

Rectangular hydrophilic strip made with smooth sides.

COLOUR	BLACK
Swellseal Type F	20 x 5, 20 x 10, 20 x 20 and up to 27 x 27mm
Swellseal Type S	20 x 5mm

Consumption

The necessary quantities depend on the length of the various (construction) joints, which need to be sealed. Roll ends are simply butted together to assure continuous seal.

Typical design consumption for Swellseal Adhesive/Adhesive P/Adhesive S on a smooth concrete surface can be calculated by multiplying the strip or rebate width in mm by a factor to calculate consumption.

Swellseal Adhesive: strip width multiplied by 2.5 gives consumption in ml/m. Swellseal Adhesive P: strip width multiplied by 1 gives consumption in g/m. Swellseal Adhesive S: strip width multiplied by 1.45 gives consumption in g/m.

Storage

Swellseal 3V: unlimited in a dry place in its original packaging.

Swellseal Adhesive/Adhesive S/Adhesive P need to be stored in a dry and conditioned area. Storage temperature needs to be between 5°C and 25°C.

Shelf life: 1 year in the original closed packaging.

Application

1. Type Selection

- Type F: for sealing joints between precast elements, horizontal and vertical construction joints, pipe penetrations and concrete to steel joints.
- Type S: for sealing joints between precast tunnel segments.
- Swellseal 3V can only function properly in a confined space. The expansion of Swellseal 3V will create a certain pressure, installation in the middle of the joint is preferred.
- Installation during heavy rain or in prolonged contact with water can result in a premature swelling of the strip, which should be avoided.
- Application surfaces should be level, dry, clean and free of oils, dust and laitance, etc

2. Nail Application (Insitu Concrete Construction Joints)

- Nail application is only recommended in insitu concrete applications. For precast element and segment applications, it is recommended to glue Swellseal 3V strips due to concrete hardness.
- Swellseal 3V should only be applied to level and smooth surfaces. If possible, make a rebate of the same width as the selected Swellseal 3V profile during concrete pour using a wooden or metal strip. If this rebate can not be made into the poured concrete surface and the surface is rough, it is recommended to level the surface with Swellseal Mastic WA before installation of the Swellseal 3V strip.
- When nailing the strip into place, use nails with washers of a diameter smaller than the width of the Swellseal 3V strip. Use one nail every 20cm.
- Slight tension should be applied to the waterproofing strip during nailing to assure complete contact with the joint surface. Do not stretch the strip during application of this tension.
- The applicator must ensure complete contact of the strip with the joint surface during nailing, pull the strip to ensure the correct tension without overstretching when nailing.

3. Application using MS Fixer (Dry or Moist Concrete Substrates)

- Apply a 5 x 10mm bead of MS Fixer in the middle of the joint.
- Press the Swellseal 3V strip into the fresh MS Fixer.
- Swellseal 3V strips can be installed around pipes, either by adhesion with MS Fixer or by connecting the ends with a steel wire.

4. Application using Swellseal Adhesive, Swellseal Adhesive P or Swellseal Adhesive S (Precast Elements and Tunnel Segments)

- Swellseal 3V strips are always applied on the outside face of the compression seal as closely inwards as possible.
- Choose the correct adhesive for the application.
  - Swellseal Adhesive: brush applied contact glue for dry substrates.
  - Swellseal Adhesive P: spray applied contact glue for dry to moist substrates.
  - Swellseal Adhesive S: brush applied contact glue for single face application of Swellseal 3V type S strips.
  - In case the surface is contaminated, clean and degrease by dry compressed air or by cleaning with a cloth and solvent. Do not use water or water-based detergents.
- Please refer to the respective Technical Data Sheet of the chosen Swellseal Adhesive type for application details.

- It is recommended to unroll and pre-cut the Swellseal strip to the required length.
- Apply Swellseal Adhesive, Swellseal Adhesive P or Swellseal Adhesive S according to the instructions and consumptions in the respective Technical Data Sheet.
- Let Swellseal Adhesive, Swellseal Adhesive P or Swellseal Adhesive S cure according to the curing times specified in the respective Technical Data Sheet.
- Apply the Swellseal 3V strip to the substrate and apply a constant pressure.
- The force of the pressure is more important than the duration.
- Finish the installation by lightly tapping the strip with a rubber hammer without displacing the Swellseal 3V strip

Important

- Roll ends are simply butted together to assure a waterproof seal. Do not install in overlap.
- The strip needs to be in contact with the joint over its full length.
- Swelling capacity and speed depends on the alkalinity and other contaminants in the water and is up to 3V (200%) in clean water. For applications in contact with contaminated water, please contact your local GCP representative.

5. Cleaning

Fresh Swellseal Adhesive, Swellseal Adhesive P, Swellseal Adhesive S, Swellseal Mastic WA and MS Fixer can be cleaned with Washing Agent. Cured product needs to be removed by mechanical means.

Swellseal 3V, Type F 20 x 5

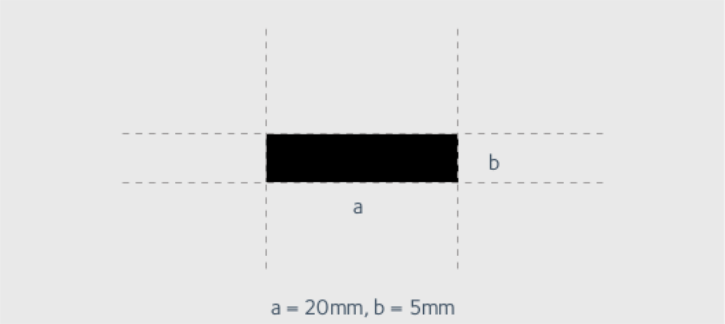

Swellseal 3V, Type S 20 x 5

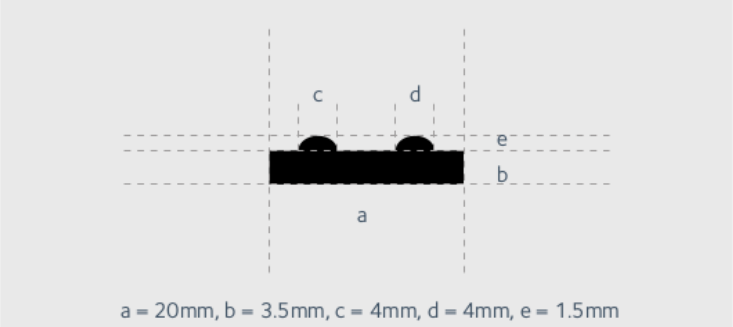

Accessories

To be ordered separately

- Swellseal Mastic WA
- MS Fixer
- Swellseal Adhesive
- Swellseal Adhesive P
- Swellseal Adhesive S (See respective Technical Data Sheets)

Health and Safety

Always wear correct and suitable personal protection equipment: full covering overalls, gloves and safety goggles. Avoid breathing in vapour. Provide sufficient ventilation. When working in confined areas, wear suitable respiratory protection. In case of contact with eyes and skin, rinse abundantly with water. If the irritation persists, consult a doctor. For more information please consult the relevant Material Safety Data Sheet (MSDS)

Packaging

Swellseal 3V is packed on rolls in cardboard boxes.

SWELLSEAL 3V	ROLL LENGTH	CARDBOARD BOX	PALLET
Type F			
20 x 5mm	15m	75m	24 boxes
20 x 10mm	10m	50m	24 boxes
20 x 20mm	A5m	DIN 5350420m	24 boxes
27 x 27mm	5m	20m	18 boxes
Type S			
20 x 5mm	15mm	75mm	24 boxes

We hope the information here will be helpful. It is based on data and knowledge considered to be true and accurate, and is offered for consideration, investigation and verification by the user, but we do not warrant the results to be obtained. Please read all statements, recommendations, and suggestions in conjunction with our conditions of sale, which apply to all goods supplied by us. No statement, recommendation, or suggestion is intended for any use that would infringe any patent, copyright, or other third party right.

Swellseal is a trademark, which may be registered in the United States and/or other countries, of GCP Applied Technologies, Inc. This trademark list has been compiled using available published information as of the publication date and may not accurately reflect current trademark ownership or status.

© Copyright 2024 GCP Applied Technologies, Inc. All rights reserved.

GCP Applied Technologies Inc., 2325 Lakeview Parkway, Alpharetta, GA 30009, USA

GCP (Singapore) Pte. Ltd, 25 Tanjong Penjuru, Singapore 609024.

This document is only current as of the last updated date stated below and is valid only for use in Singapore. It is important that you always refer to the currently available information at the URL below to provide the most current product information at the time of use. Additional literature such as Contractor Manuals, Technical Bulletins, Detail Drawings and detailing recommendations and other relevant documents are also available on www.gcpat.sg. Information found on other websites must not be relied upon, as they may not be up-to-date or applicable to the conditions in your location and we do not accept any responsibility for their content. If there are any conflicts or if you need more information, please contact GCP Customer Service.

Last Updated: 2024-01-16
gcpat.sg/solutions/products/waterstops/swellseal-3v